EXTERNAL HEAVY-DUTY HINGE 180° STAINLESS STEEL

Heavy-duty rolled hinge for mounting with screws or rivets that is ideal for vehicles. The hinge-leaves are folded, allowing for a flat surface when mounting, and the seven mounting holes have a hole diameter of Ø 7,0 mm. Opening angle 180°. The hinge pin is fixed.

MATERIAL
Hinge: Stainless steel 304

RELATED PRODUCTS
Other materials: 3-687
Use the Index Code at industrilas.com

TECHNICAL INFORMATION
Standards: DIN EN 61373

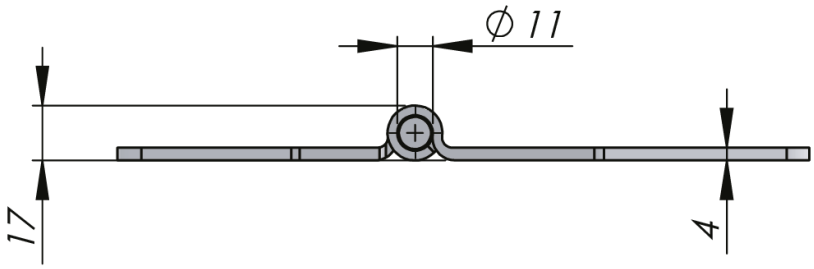

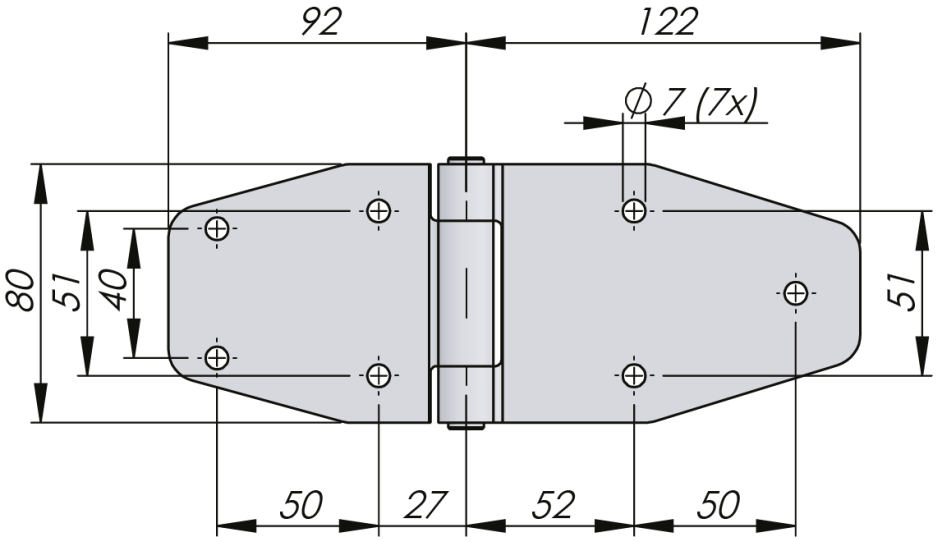

P/N	Description
323083-01	Stainless steel (304)

Industrilås
When access counts

Index Code: 6-467